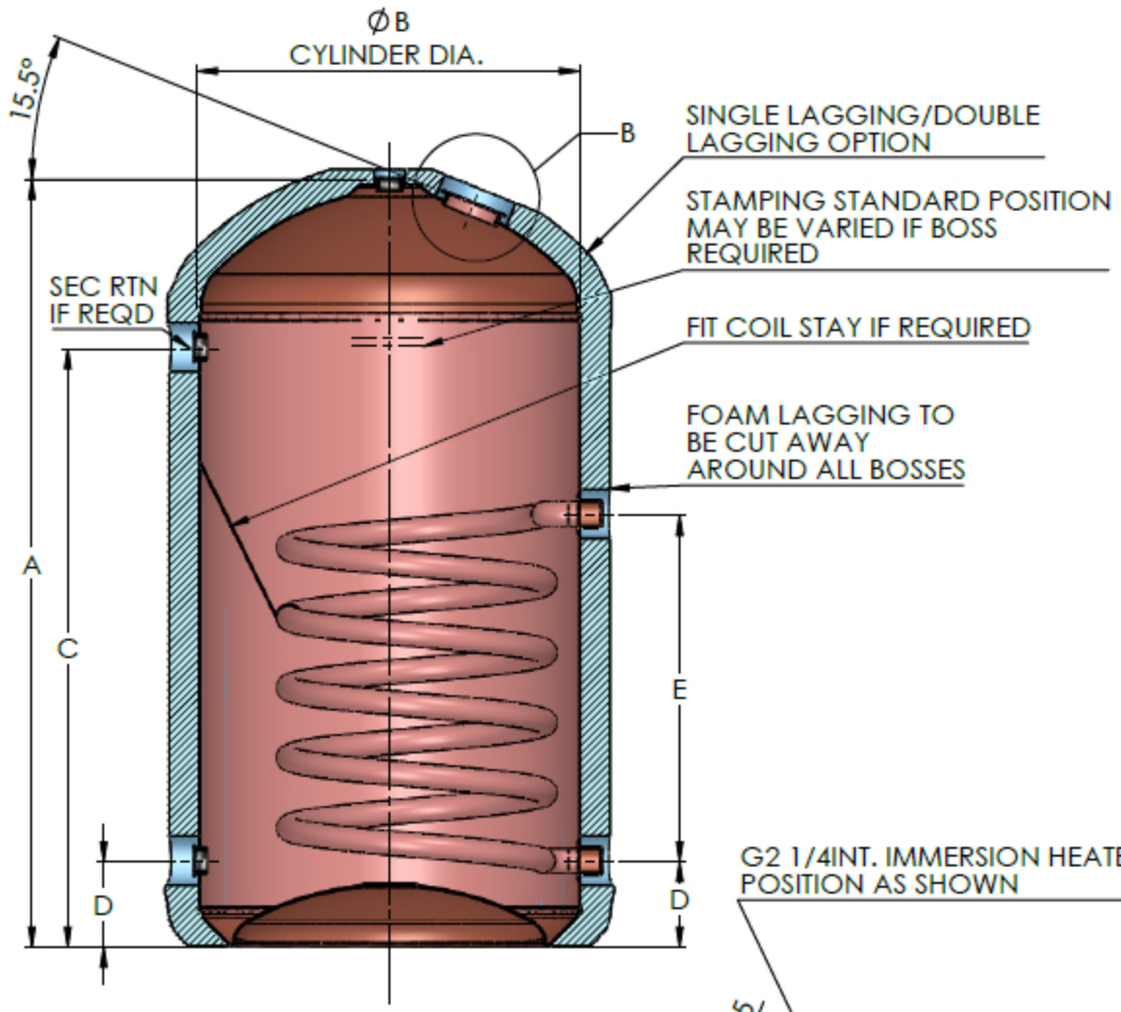

G2 1/4INT. IMMERSION HEATER BOSS POSITION AS SHOWN

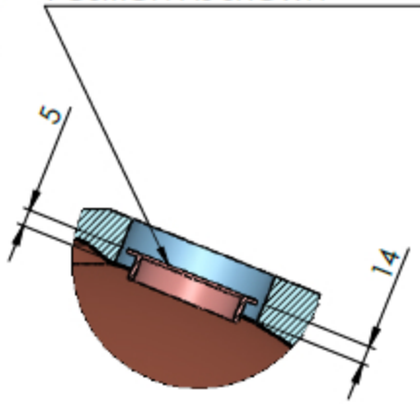

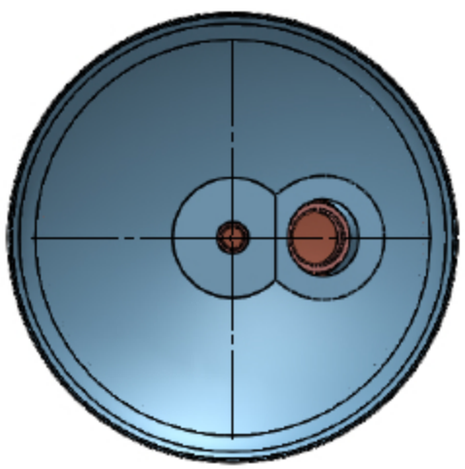

DETAIL B
SCALE 2 : 7

ALBION INDIRECT GRAVITY

	CODE	A	B	C	D	E	COIL REF.	VOL.	FOAM
1	KN600300G3G	600	300	400	100	300	TUBECOIL28Z4	45	35
2	KN1200300G3G	1200	300	1000	100	735	TUBECOIL28Z4	73	35
3	KN1500300G3G	1500	300	1300	100	1140	TUBECOIL28Z4	95	35
4	KN1600300G3G	1600	300	1400	100	1240	TUBECOIL28Z4	96	35
5	KN1800300G3G	1800	300	1600	100	1440	TUBECOIL28Z5	114	55
6	KN900350G3G	900	350	700	100	500	TUBECOIL28Z4	72	35
7	KN1050350G3G	1050	350	850	100	650	TUBECOIL28Z4	87	35
8	KN1200350G3G	1200	350	1000	100	735	TUBECOIL28Z4	103	35
9	KN750375G3G	750	375	550	100	405	TUBECOIL28Z4	70	35
10	KN900375G3G	900	375	700	100	500	TUBECOIL28Z4	86	35
11	KN975375G3G	975	375	775	100	550	TUBECOIL28Z4	95	35
12	KN1050375G3G	1050	375	850	100	650	TUBECOIL28Z5	102	35
13	KN1200375G3G	1200	375	1000	100	735	TUBECOIL28Z5	115	35
14	KN1500375G3G	1500	375	1300	100	1140	TUBECOIL28Z5	150	35
15	KN600400G3G	600	400	400	100	300	TUBECOIL28Z4	62	35
16	KN700400G3G	700	400	500	100	405	TUBECOIL28Z4	70	35
17	KN750400G3G	750	400	550	100	405	TUBECOIL28Z4	80	35
18	KN800400G3G	800	400	600	100	405	TUBECOIL28Z4	85	35
19	KN900400G3G	900	400	700	100	500	TUBECOIL28Z4	96	35
20	KN1050400G3G	1050	400	850	100	650	TUBECOIL28Z5	114	35
21	KN1200400G3G	1200	400	1000	100	735	TUBECOIL28Z6	133	35
22	KN1500400G3G	1500	400	1300	100	1140	TUBECOIL28Z8	170	35
23	KN1800400G3G	1800	400	1600	100	1310	TUBECOIL28Z8	200	55
24	KN675450G3G	675	450	475	100	330	TUBECOIL28Z4	84	35
25	KN750450G3G	750	450	550	100	405	TUBECOIL28Z4	95	35
26	KN800450G3G	800	450	600	100	405	TUBECOIL28Z4	102	35
27	KN825450G3G	825	450	625	100	480	TUBECOIL28Z4	106	35
28	KN900450G3G	900	450	700	100	500	TUBECOIL28Z5	117	35
29	KN1050450G3G	1050	450	850	100	650	TUBECOIL28Z6	140	35
30	KN1200450G3G	1200	450	1000	100	800	TUBECOIL28Z7	162	35
31	KN1350450G3G	1350	450	1150	100	900	TUBECOIL28Z8	180	35
32	KN1400450G3G	1400	450	1200	100	950	TUBECOIL28Z8	190	35
33	KN1500450G3G	1500	450	1300	100	1100	TUBECOIL28Z9	206	35
34	KN1200500G3G	1200	500	1000	150	520	TUBECOIL28Z10	205	35
35	KN1500500G3G	1500	500	1300	150	1035	TUBECOIL28Z12	245	35
36	KN1800500G3G	1800	500	1600	150	1310	TUBECOIL28Z14	306	55

NOTES:
1. OLDER VERSION OF THIS DRAWING: A33531GC AND AWH0087
2. SECONDARY RETURN BOSS NOT FITTED TO SIZES 0-9E (REF BS1566).
3. FIT SECONDARY RETURN BOSS TO BS1566 SIZES 10-11 AS STANDARD.
4. ENSURE AN IMMERSION HEATER OF LENGTH B - 200mm WILL FIT IN CYLINDER WITHOUT FOULING.
5. FIT COIL STAY TO CYLINDERS BS1566 REF. 9-14
6. STANDARD POSITION OF STAMPING AS SHOWN. SEE DRG A33652 FOR STAMPING DETAILS.
7. CYLINDER LABEL TO BE POSITIONED ON INSULATION OVER STAMPING POSITION.
8. 900 X 450 SIZE SHOWN

BS1566 REF.	PRIMARY COIL	SEC. CONN.	DIA
0-9E	G1 EXT.	G1 INT.	300-450
10-11	G1 1/4 EXT.	G1 1/2 INT	500

DATE	AMENDMENTS DESCRIPTION	ECN	REV
11/12/2018	FIRST ISSUE	480	1

△ = REVISION MARK

DRAWING NUMBER: A50138
STOCK CODE: SEE TABLE
MATERIAL: COPPER
DESCRIPTION: ALBION INDIRECT G3 GRAVITY COIL (28MM) 300/350/375/400/450/500 DIA GENERAL ASSEMBLY
SCALE: NTS
FIRST ANGLE PROJECTION
TOLERANCE: ± 3mm UNLESS STATED

PLEASE CHECK THE CONTENTS OF THE DRAWING AND PROVIDE A SIGNATURE FOR APPROVAL

CUSTOMER		DATE
PRODUCTION		DATE
QUALITY		DATE
TECHNICAL	DT	DATE 11/12/2018
DRAWN BY	A.VASIUTIN	DATE 11/12/2018

DO NOT SCALE, REMOVE ALL SHARP EDGES, ALL DIMENSIONS IN MILLIMETRES , IF IN DOUBT - ASK

Kingspan.

TADMAN STREET, WAKEFIELD, WF1 5QU
COPYRIGHT ©
NO PART OF THIS DRAWING CAN BE REPRODUCED OR DISTRIBUTED WITHOUT KINGSPAN'S WRITTEN CONSENT